Cloche Rose

Cloche

Rose

Specifications

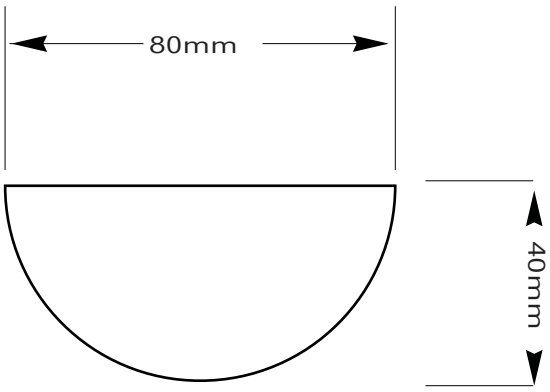

Finishes

Gloss Ivory

Naked Ivory

Gloss Black

Gloss Royal Blue

Transluscent Naked

Transluscent Gloss

Antique Sepia

Antique Black

Basalt

Luxe Gold

Luxe Silver

Luxe Blue Steel

Ex Luxe 24K Gold

Ex Luxe Copper

Ex Luxe Platinum

Information

appx weight:	200 gm
Usage:	Designed to be used in 110V - 240V applications 80mm40mm

Contact

23-25 Derby Street
Collingwood
3066 Victoria Australia
T. +61 3 9044 2728

www.porcelainbear.com

Porcelain Bear

Eido Rose

Eido

Rose

Specifications

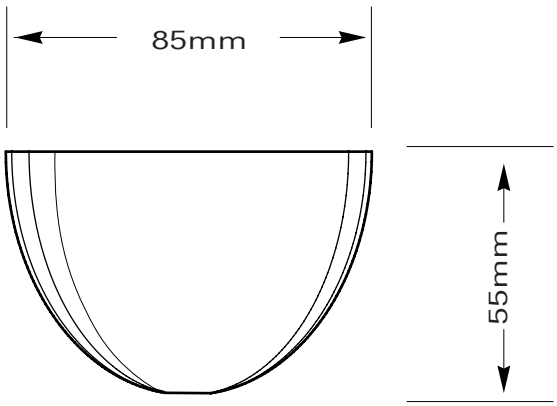

Finishes

Gloss Ivory

Naked Ivory

Gloss Black

Gloss Royal Blue

Transluscent Naked

Transluscent Gloss

Antique Sepia

Antique Black

Basalt

Luxe Gold

Luxe Silver

Luxe Blue Steel

Ex Luxe 24K Gold

Ex Luxe Copper

Ex Luxe Platinum

Information

appx weight:	200 gm
Usage:	Designed to be used in 110V - 240V applications 80mm40mm

Contact

23-25 Derby Street
Collingwood
3066 Victoria Australia
T. +61 3 9044 2728

www.porcelainbear.com

Porcelain Bear

Hook-Up Rose

Hook-Up

Rose

Specifications

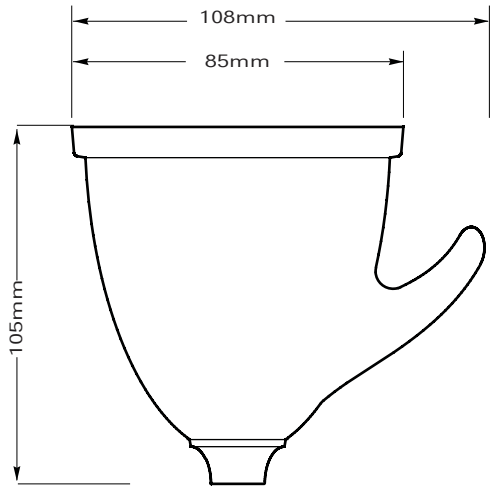

Finishes

Gloss Ivory

Naked Ivory

Gloss Black

Gloss Royal Blue

Transluscent Naked

Transluscent Gloss

Antique Sepia

Antique Black

Basalt

Luxe Gold

Luxe Silver

Luxe Blue Steel

Ex Luxe 24K Gold

Ex Luxe Copper

Ex Luxe Platinum

Information

appx weight:	250 gm
Usage:	Designed to be used in 110V - 240V applications 80mm40mm

Contact

23-25 Derby Street
Collingwood
3066 Victoria Australia
T. +61 3 9044 2728

www.porcelainbear.com

Porcelain Bear

Pillow Rose

Pillow

Rose

Specifications

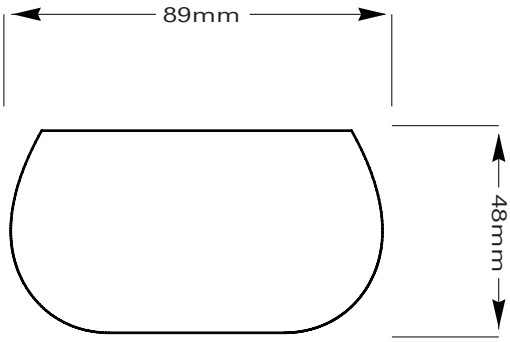

Finishes

Gloss Ivory

Naked Ivory

Gloss Black

Gloss Royal Blue

Transluscent Naked

Transluscent Gloss

Antique Sepia

Antique Black

Basalt

Luxe Gold

Luxe Silver

Luxe Blue Steel

Ex Luxe 24K Gold

Ex Luxe Copper

Ex Luxe Platinum

Information

appx weight:	250 gm
Usage:	Designed to be used in 110V - 240V applications 80mm40mm

Contact

23-25 Derby Street
Collingwood
3066 Victoria Australia
T. +61 3 9044 2728

www.porcelainbear.com

Porcelain Bear

Top Hat Rose

Top Hat

Rose

Specifications

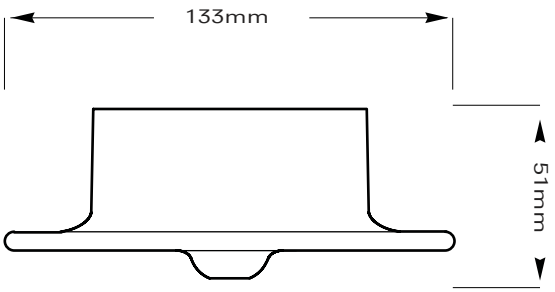

Finishes

Gloss Ivory

Naked Ivory

Gloss Black

Gloss Royal Blue

Transluscent Naked

Transluscent Gloss

Antique Sepia

Antique Black

Basalt

Luxe Gold

Luxe Silver

Luxe Blue Steel

Ex Luxe 24K Gold

Ex Luxe Copper

Ex Luxe Platinum

Information

appx weight:	250 gm
Usage:	Designed to be used in 110V - 240V applications 80mm40mm

Contact

23-25 Derby Street
Collingwood
3066 Victoria Australia
T. +61 3 9044 2728

www.porcelainbear.com

Porcelain Bear

Victorian Rose

Victorian

Rose

Specifications

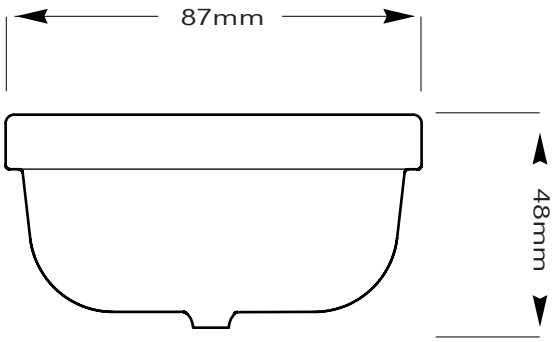

Finishes

Gloss Ivory

Naked Ivory

Gloss Black

Gloss Royal Blue

Transluscent Naked

Transluscent Gloss

Antique Sepia

Antique Black

Basalt

Luxe Gold

Luxe Silver

Luxe Blue Steel

Ex Luxe 24K Gold

Ex Luxe Copper

Ex Luxe Platinum

Information

appx weight:	250 gm
Usage:	Designed to be used in 110V - 240V applications 80mm40mm

Contact

23-25 Derby Street
Collingwood
3066 Victoria Australia
T. +61 3 9044 2728

www.porcelainbear.com

Porcelain Bear

Vintage Rose

Vintage

Rose

Specifications

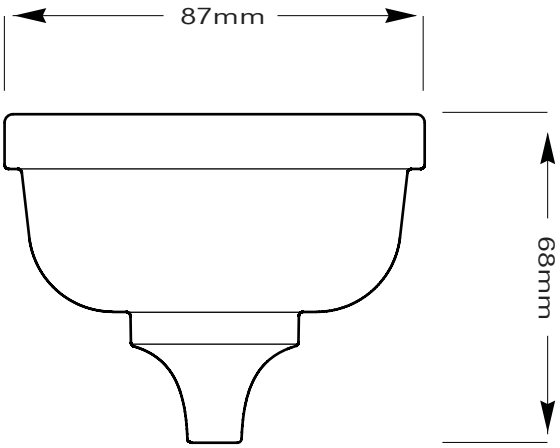

Finishes

Gloss Ivory

Naked Ivory

Gloss Black

Gloss Royal Blue

Transluscent Naked

Transluscent Gloss

Antique Sepia

Antique Black

Basalt

Luxe Gold

Luxe Silver

Luxe Blue Steel

Ex Luxe 24K Gold

Ex Luxe Copper

Ex Luxe Platinum

Information

appx weight:	250 gm
Usage:	Designed to be used in 110V - 240V applications 80mm40mm

Contact

23-25 Derby Street
Collingwood
3066 Victoria Australia
T. +61 3 9044 2728

www.porcelainbear.com

Porcelain Bear